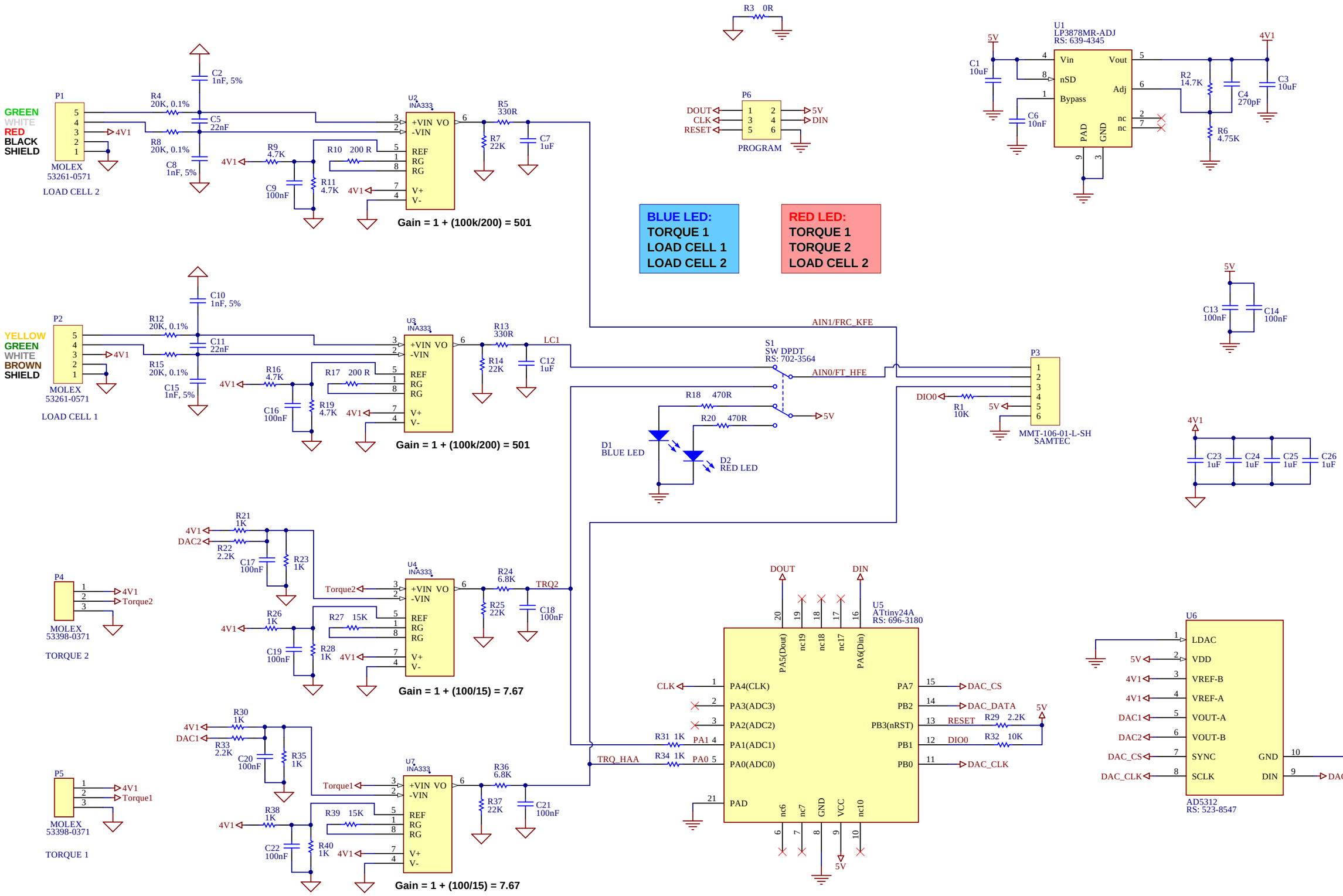

Cannot open file D:\Documents and Settings\mmigliorini\My	Title: HYQ Load Cells and Torque Sensors Amplifier V3.1
	File: LC_Torque.SchDoc
	Date: 07/01/2016 Sheet 1 of 1 Size: A3
	Time: 12:18:50 Drawn by: Marco Migliorini